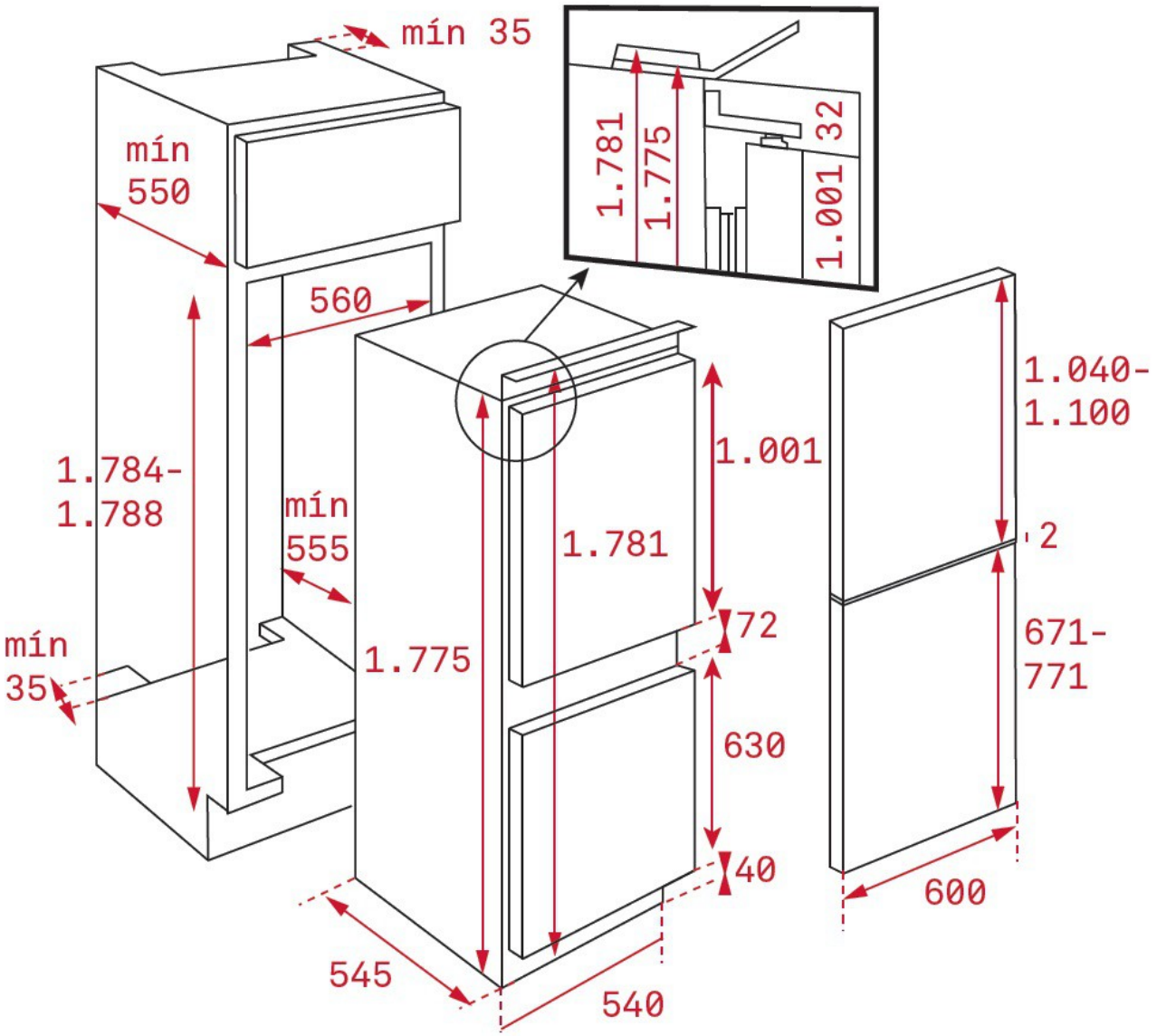
mín 35
mín
550
560
1.784-
1.788
mín
555
mín
35
1.775
1.781
1.001
72
630
40
545
540
1.781
1.775
32
1.001
1.040-
1.100
2
671-
771
600